Parts List				
IT	QT	DESCRIPTION	PART NUMBER	LENGTH
1	14	GH-PIPE - 2	GH-PIPE - 2	1420,0 mm
2	6	GH-PIPE - 4	GH-PIPE - 4	500,0 mm
3	6	GH-PIPE - 1	GH-PIPE - 1	1700,0 mm
4	2	GH-PIPE - 3	GH-PIPE - 3	2430,0 mm
5	3	GH-PIPE - 7	GH-PIPE - 7	
6	22	G1 CONNECTION	G1 CONNECTION	
7	7	G4 CONNECTION	G4 CONNECTION	
8	8	G10 CONNECTION	G10 CONNECTION	
10	2	G2 CONNECTION	G2 CONNECTION	

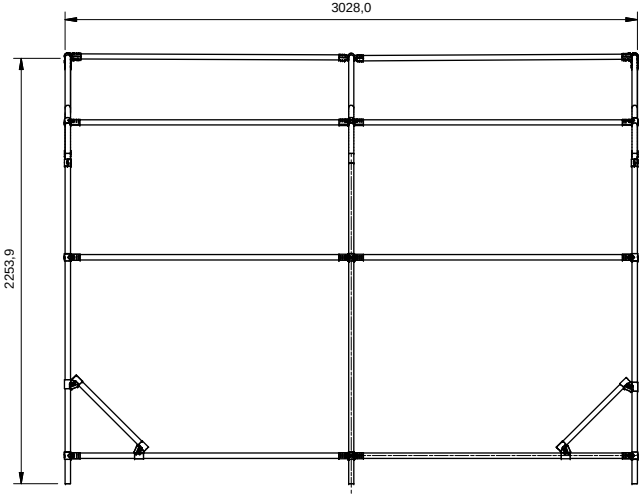

FRONT VIEW

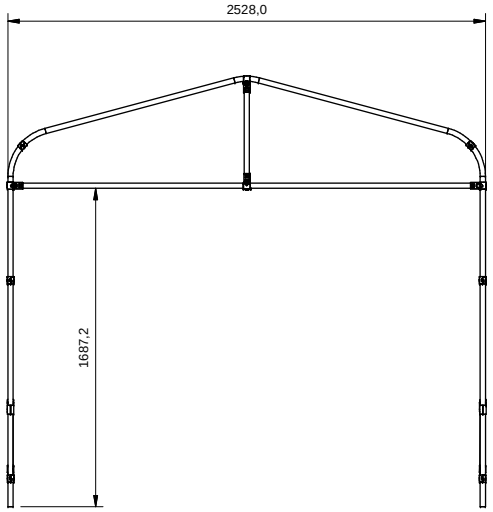

SIDE VIEW

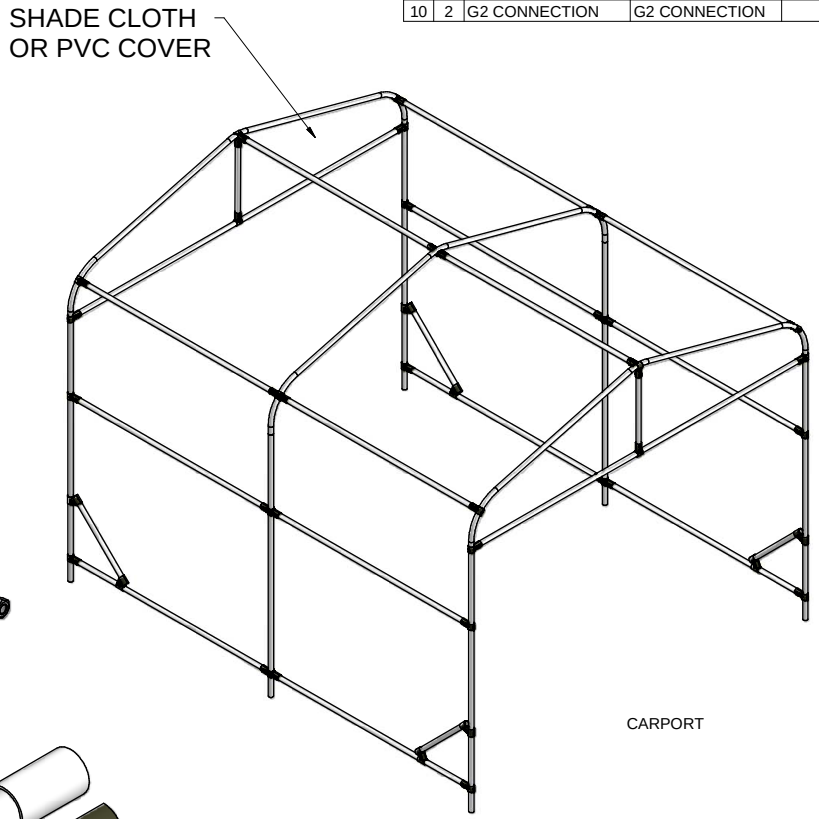

CARPORT

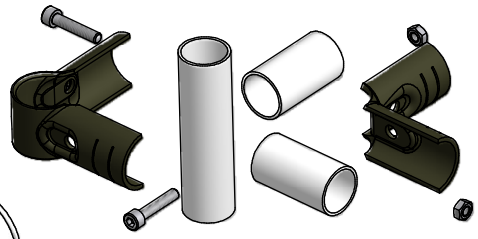

G2 CONNECTION

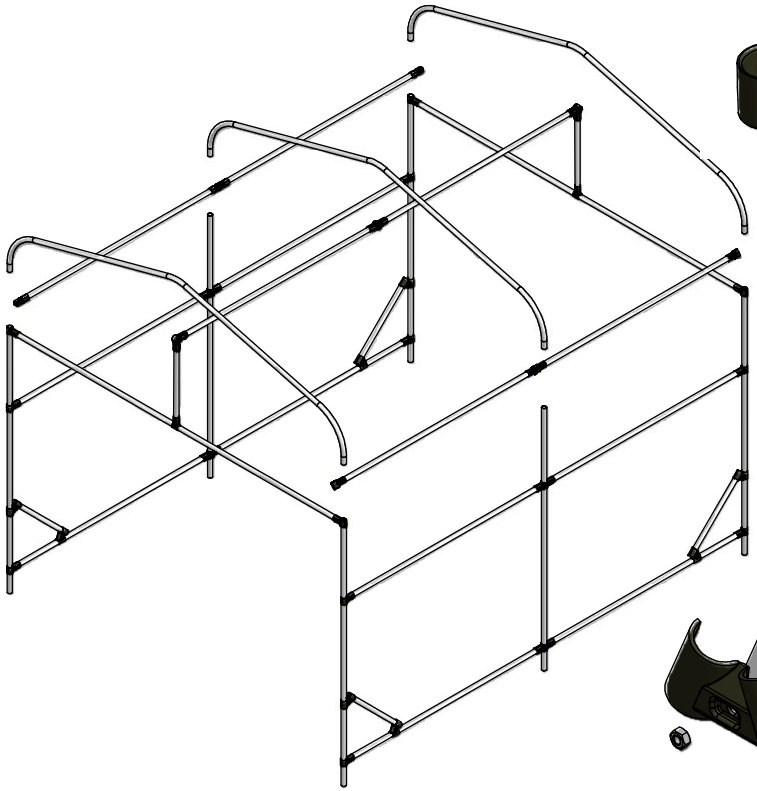

EXPLODED VIEW

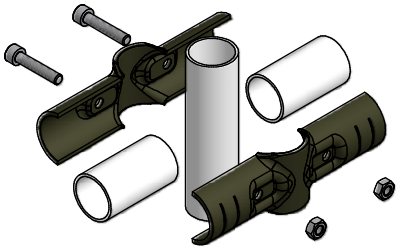

G4 CONNECTION

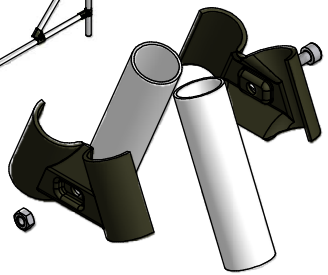

G10 CONNECTION

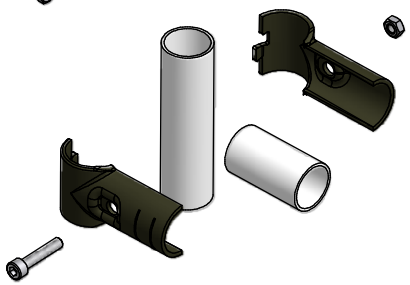

GI CONNECTION

IF IN DOUBT ASK
ALL DIMENSIONS ARE IN MILLIMETRES
DRAWING TO SABS 0111
TOLERANCES TO SABS ISO 286, UNLESS OTHERWISE STATED.
WELDING SYMBOLS TO SABS ISO 2553.
REMOVE ALL BURRS AND SHARP EDGES.

ALL SURFACES TO BE MACHINED UNLESS OTHERWISE SPECIFIED (Ra) 1.6

MACH. TOL.		
	X	± 0.5
	X.X	± 0.2
	X.XX	± 0.1
ALL FLAME CUTS		± 1.5

EDGE FINISH +0.4 -0.4

DO NOT USE FOR MANUFACTURE OR INSPECTION UNLESS STAMPED WITH THE '**RELEASED FOR MANUFACTURE**' STAMP.
ALWAYS REFER TO THE LATEST REVISION.

MANUF.	DES. Tonyf	CHK. Tonyf	DATE 2009/08/11

CUSTOMER: EZI RACKING
PROJECT: CATALOGUE PRODUCTS

TITLE: CARPORT

INVENTOR MODEL NAME: CARPORT.iam

DWG. NUMBER: CARPORT

SCALE: NTS
SIZE ISO A3
SHEET 1/1
REV 0
Autodesk Inventor (tm)